CAP BILL OF REINFORCEMENT

SUPERSTRUCTURE HEIGHT SDH=Beam Height +pad height +(haunch+slab) [if applicable]		16'-0" BRIDGE WIDTH MARK	TYPE	NO.	SIZE	LENGTH	24'-0" BRIDGE WIDTH MARK	TYPE	NO.	SIZE	LENGTH	32'-0" BRIDGE WIDTH MARK	TYPE	NO.	SIZE	LENGTH
H1	12" ≤SDH≤27"	A1e	14s	22	5	11- 0	A1e	14s	29	5	11- 0	A1e	14s	36	5	11- 0
		A2e	Str.	9	8	23- 7	A2e	Str.	9	8	31-11	A2e	Str.	9	8	40- 2
		A3e	Str.	4	5	23- 7	A3e	Str.	4	5	31-11	A3e	Str.	4	5	40- 2
H2	27" <SDH≤35"	A1e	14s	24	5	11- 0	A1e	14s	34	5	11- 0	A1e	14s	41	5	11- 0
		A2e	Str.	9	8	26- 4	A2e	Str.	9	8	34- 8	A2e	Str.	9	8	42-11
		A3e	Str.	4	5	26- 4	A3e	Str.	4	5	34- 8	A3e	Str.	4	5	42-11
H3	35" <SDH≤50"	A1e	14s	29	5	11- 0	A1e	14s	36	5	11- 0	A1e	14s	44	5	11- 0
		A2e	Str.	9	8	31- 7	A2e	Str.	9	8	39-11	A2e	Str.	9	8	48- 2
		A3e	Str.	4	5	31- 7	A3e	Str.	4	5	39-11	A3e	Str.	4	5	48- 2

WING BILL OF REINFORCEMENT

MARK	TYPE	NO.	SIZE	LENGTH	MARK	TYPE	NO.	SIZE	LENGTH	MARK	TYPE	NO.	SIZE	LENGTH
A4e	Str.	14	5	4- 0	A7e	Str.	2	5	3- 4	A10e	Str.	1	6	2- 6
A5e	Str.	2	5	3- 2	A8e	Str.	2	5	4- 1	A11e	Str.	1	6	3- 4
A6e	Str.	2	5	2- 6	A9e	Str.	1	6	3- 2	A12e	Str.	1	6	4- 1
A4e	Str.	20	5	4- 8	A7e	Str.	3	5	4- 8	A10e	Str.	1	6	3-11
A5e	Str.	3	5	4- 7	A8e	Str.	3	5	5- 4	A11e	Str.	1	6	4- 8
A6e	Str.	3	5	3-11	A9e	Str.	1	6	4- 7	A12e	Str.	1	6	5- 4
A4e	Str.	30	5	5-11	A7e	Str.	4	5	7- 4	A10e	Str.	1	6	7- 0
A5e	Str.	4	5	7- 2	A8e	Str.	4	5	8- 0	A11e	Str.	1	6	7-10
A6e	Str.	4	5	6- 6	A9e	Str.	1	6	7- 8	A12e	Str.	1	6	8- 6

BRIDGE WIDTH	PILE LOAD SIZE	PILE LOAD TONS	PILES NO.	PE	PS	PL	DIMENSIONS Geometry L	L1	L2	Reinforcement A	B	C	D	E	F	G	WING A Back Face H	WALB	WAUB	WV	WX	J	K	Front Face WALF	WAUF	WV	WX	J	K	WING B Back Face WBLB	WBUB	WV	WX	J	K	Front Face WBLF	WBUF	WV	WX	J	K	QUANTITIES CONC. (C.Y.)	STEEL (LBS.)
16	H1	95	3	3'-11⅞"	8'-0"	16'-0"	23'-11¾"	11'-6⅞"	12'-4⅞"	2⅛"	4	11"	2'-9"	7	12"	6'-0"	2	3'-7⅞"	0	0	0	3	2'-0"	2'-10⅛"	0	0	0	3	2'-0"	3'-8⅛"	0	0	0	4	3'-0"	4'-5⅞"	0	0	0	4	3'-0"	10.2	1024
	H2	87	4	2'-10⅜"	7'-0"	21'-0"	26'-8¾"	12'-11⅞"	13'-8⅞"	4⅜"	3	9"	1'-6"	6	12"	5'-0"	3	5'-0⅞"	0	0	0	5	4'-0"	4'-3⅛"	0	0	0	4	3'-0"	5'-0⅛"	0	0	0	5	4'-0"	5'-9⅞"	0	0	0	6	5'-0"	12.6	1203
	H3	108	4	3'-11⅞"	8'-0"	24'-0"	31'-11¾"	15'-6⅞"	16'-4⅞"	2⅞"	4	11"	2'-9"	7	12"	6'-0"	4	7'-7⅞"	3'-4⅞"	4'-3"	2'-1"	7	6'-0"	6'-10⅛"	2'-7⅛"	4'-3"	2'-1"	7	6'-0"	7'-8⅛"	3'-5⅛"	4'-3"	2'-1"	8	7'-0"	8'-5⅞"	4'-2⅞"	4'-3"	2'-1"	8	7'-0"	17.5	1578
24	H1	99	4	4'-1⅝"	8'-0"	24'-0"	32'-3¼"	15'-8⅜"	16'-6⅜"	4⅜"	4	11"	2'-9"	7	12"	6'-0"	2	3'-7⅞"	0	0	0	3	2'-0"	2'-10⅛"	0	0	0	3	2'-0"	3'-8⅛"	0	0	0	4	3'-0"	4'-5⅞"	0	0	0	4	3'-0"	12.9	1340
	H2	98	5	2'-6⅛"	7'-6"	30'-0"	35'-0¼"	17'-1⅝"	17'-10⅝"	4⅛"	3	7"	1'-2"	7	11"	5'-6"	3	5'-0⅞"	0	0	0	5	4'-0"	4'-3⅛"	0	0	0	4	3'-0"	5'-0⅛"	0	0	0	5	4'-0"	5'-9⅞"	0	0	0	6	5'-0"	15.4	1553
	H3	123	5	4'-1⅝"	8'-0"	32'-0"	40'-3¼"	19'-8⅝"	20'-6⅝"	4⅝"	4	11"	2'-9"	7	12"	6'-0"	4	7'-7⅞"	3'-4⅞"	4'-3"	2'-1"	7	6'-0"	6'-10⅛"	2'-7⅛"	4'-3"	2'-1"	7	6'-0"	7'-8⅛"	3'-5⅛"	4'-3"	2'-1"	8	7'-0"	8'-5⅞"	4'-2⅞"	4'-3"	2'-1"	8	7'-0"	20.2	1887
32	H1	87	6	2'-9¼"	7'-0"	35'-0"	40'-6½"	19'-10¼"	20'-8¼"	3¼"	3	9"	1'-6"	6	12"	5'-0"	2	3'-7⅞"	0	0	0	3	2'-0"	2'-10⅛"	0	0	0	3	2'-0"	3'-8⅛"	0	0	0	4	3'-0"	4'-5⅞"	0	0	0	4	3'-0"	15.7	1653
	H2	108	6	2'-10¾"	7'-6"	37'-6"	43'-3½"	21'-3¼"	22'-0¼"	2¾"	3	10"	1'-8"	7	11"	5'-6"	3	5'-0⅞"	0	0	0	5	4'-0"	4'-3⅛"	0	0	0	4	3'-0"	5'-0⅛"	0	0	0	5	4'-0"	5'-9⅞"	0	0	0	6	5'-0"	18.2	1866
	H3	115	7	3'-3¼"	7'-0"	42'-0"	48'-6½"	23'-10¼"	24'-8¼"	3¼"	4	8"	2'-0"	6	12"	5'-0"	4	7'-7⅞"	3'-4⅞"	4'-3"	2'-1"	7	6'-0"	6'-10⅛"	2'-7⅛"	4'-3"	2'-1"	7	6'-0"	7'-8⅛"	3'-5⅛"	4'-3"	2'-1"	8	7'-0"	8'-5⅞"	4'-2⅞"	4'-3"	2'-1"	8	7'-0"	23.0	2219

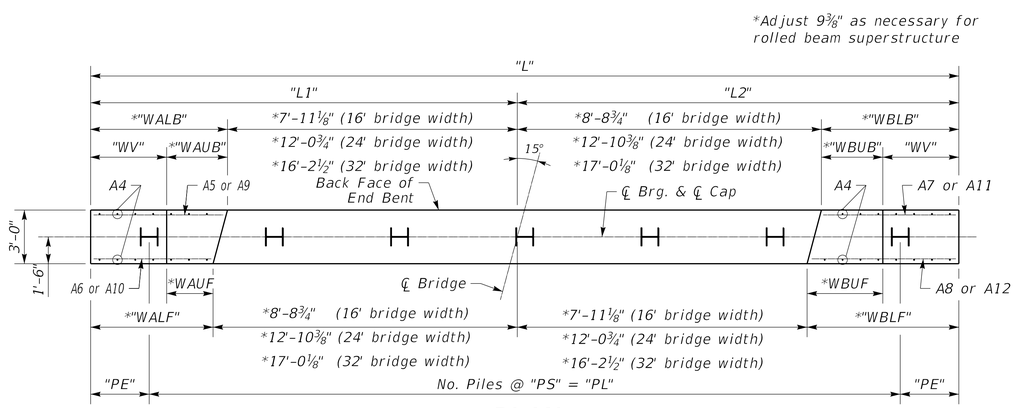

PLAN

(Left skew shown, right skew opposite hand)

NOTES:

1) Conform to KYTC, Standard Specifications, Current Edition.
2) Concrete to be Class "A", 3500 psi.
3) Rebar to be epoxy coated A615, Grade 60.
4) Maintain 2" clear cover to reinforcement unless otherwise noted.
5) End Bents are designed for the maximum span of the following steel and concrete beams as shown in the current standards:
   H1 - B12, CB12, B17, CB17, B21 or rolled steel beams up to 16" nominal depth.
   H2 - CB21, B27, CB27, B33 or rolled steel beams up to 24" nominal depth.
   H3 - CB33, B42, CB42 or rolled steel beams up to 36" nominal depth.
6) Piles may be HP12x53 or 16" Steel Pipes with ½" wall thickness.
7) Piles driven to rock must be driven to Refusal. Friction Piles must be driven to (Pile Load/0.4) using the Gates Method.
8) Pile load given is Factored Strength Load.
9) Piles must be driven 10' into existing ground or to refusal on bedrock. Piles at wet crossings must be driven to 10' below stream bed or to refusal on bedrock. A minimum pile length of 10' is required in all circumstances.
10) Contractor shall provide a hammer capable of driving the piling to refusal or capacity without encountering excessive blow counts or damaging the pile. Contractor shall be responsible for all damaged piling.

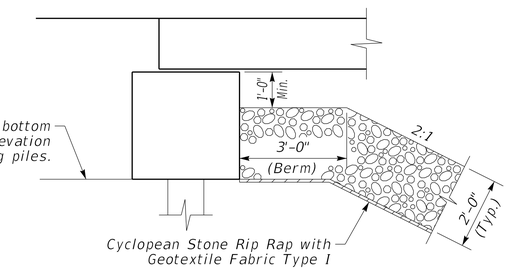

SECTION THRU END BENT

(Showing berm and fill slope)

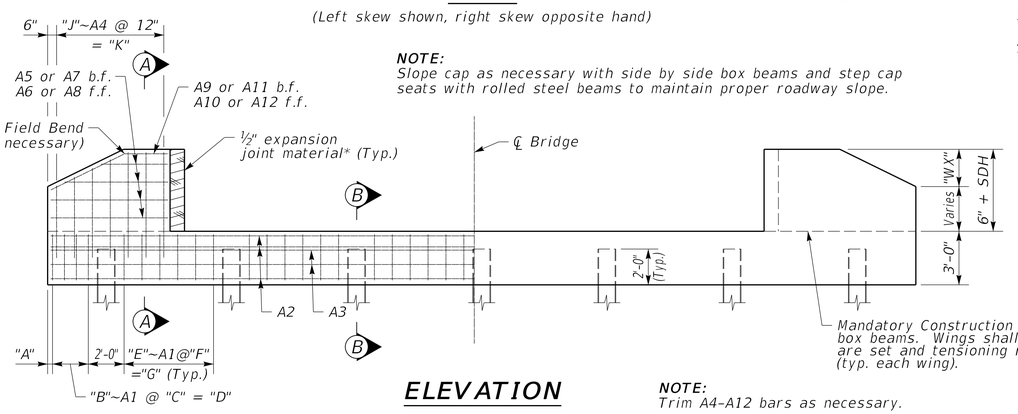

NOTE:
Slope cap as necessary with side by side box beams and step cap seats with rolled steel beams to maintain proper roadway slope.

ELEVATION

NOTE:
Trim A4-A12 bars as necessary.

*Expansion Joint Material:
AASHTO M153
Type-I Sponge Rubber

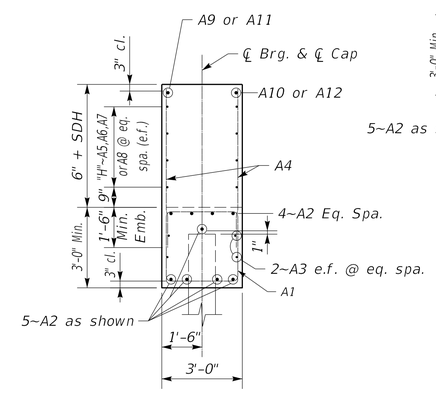

SECTION A-A

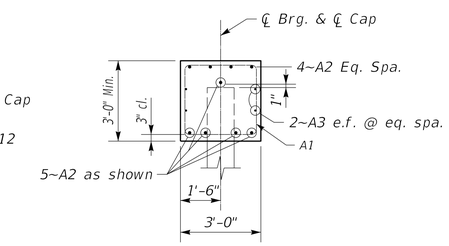

SECTION B-B

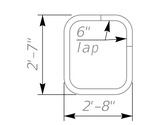

A1 Bar

~Size #5~

REVISION DATE: 08/11/2025
REVISION NUMBER: 0

SUBMITTED Michael Crofts DIVISION DIRECTOR 08-11-2025 DATE
APPROVED Jason Bellinger STATE HIGHWAY ENGINEER 08-11-2025 DATE

BRIDGE STANDARDS

COMMONWEALTH OF KENTUCKY
DEPARTMENT OF HIGHWAYS

PILE END BENT 15° SKEW

STAMDARD DRAWING NUMBER
BSE-002-01

OpenRoads Designer v23.00.01.11